BT5921

CEILING MOUNT WITH TILT
FOR USE WITH Ø1.5" POLES

The BT5921 is a ceiling mount from B-Tech's System V Range; a collection of components designed for the installation of security and other ceiling mounted equipment. Designed to mount Ø1.5" poles, the BT5921 features an adjustable tilt mechanism with a tilt range of up to 90°, this makes it ideal for mounting to flat or angled ceilings. Users of System V can create custom ceiling mounted solutions that suit their specific needs, using compatible B-Tech mounting interfaces and accessory collars to mount CCTV dome cameras and other AV equipment such as flat screens.

SPECIFICATIONS

Max load when mounting on one side of the pole	**55lbs**
Max load when mounting on both sides of the pole	**110lbs**
Total max load	**165lbs**
Tilt	**+90°**
Color	**White**

FEATURES

1. Attaches directly to BT5935 Ø1.5" poles
2. Can hold 55lbs either side of the pole
3. Tilt function ideal for angled ceilings
4. Ideal for mounting security / surveillance equipment

- Allows poles to be mounted on to walls in horizontal / vertical configurations
- Ideal for mounting CCTV dome characters and/or small flat screens
- Keyhole fixing for easy 'hook-on' installation
- Integrated cable management

SYSTEM V

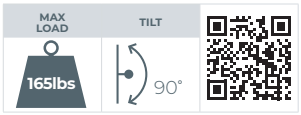

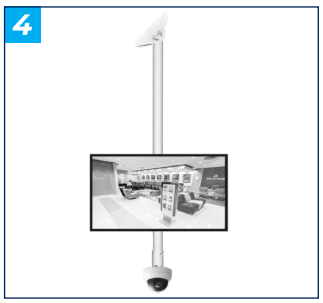

BT5921

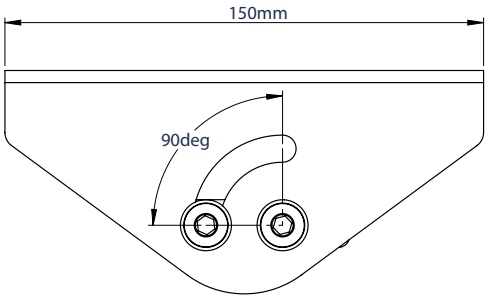

FRONT VIEW

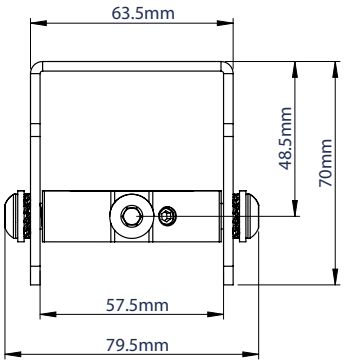

SIDE VIEW

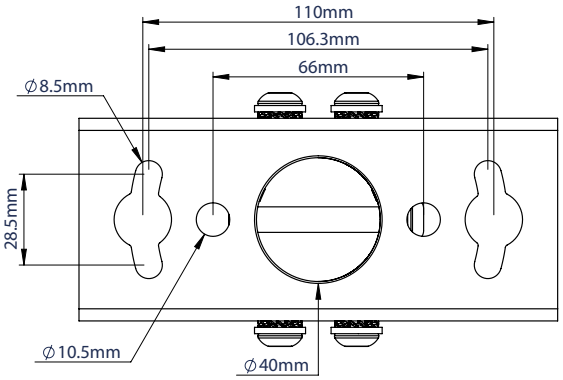

TOP VIEW

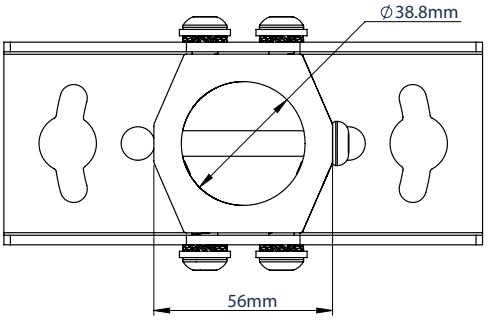

BOTTOM VIEW

ORDERING INFORMATION

COLOR	ORDER REF	BARCODE
White	BT5921/W	5019318306280

RELATED PRODUCTS

PRODUCT CODE	NAME	DESCRIPTION
BT5935	1.5" Diameter Poles	Available in 1 metre or 2 metre lengths
BT5910	Dome Security Camera Mount	Carousel mount for small / medium dome CCTV cameras
BT5920	Fixed Ceiling Mount	Mounts BT5935 ø1.5" poles to the ceiling
BT5952	Accessory Collar	Allows a range of products to be fitted to ø1.5" poles

© 2025 B-Tech AV Mounts Corporation Ltd. All rights reserved.
The information in this specification sheet reflects the current technical specifications at the time of print.
We reserve the right to change the technical or physical specifications without prior notice. The B-Tech name and the B-Tech logo are registered trademarks of B-Tech AV Mounts Co. Ltd
All other brands and products are trademarks of their respective owners. All B-Tech images and symbols are exclusive property of B-Tech AV Mounts Co. Ltd
B-Tech accept no liability for loss or damage caused by improper installation or mounting on unsuitable structures. Any reproduction or retransmission or republication of any part of this specification sheet is strictly prohibited, unless prior written permission has been granted by B-Tech AV Mounts Co. Ltd E&OE.

SS-V2-BT5921-220725