BT8370-2X2

UNIVERSAL VIDEOWALL STAND
FOR 2X2 VIDEOWALLS

Designed to mount videowalls in a 2x2 configuration, the BT8370-2x2 is a freestanding mounting solution with a universal design suitable for all videowall screens from 46" to 60". As part of B-Tech's dynamic System X range, this contemporary mounting solution is lightweight yet incredibly strong, has a high-end aesthetic quality and comes with important time saving features such as tool-less micro-adjustment and a universal screen position spacer to speed up the installation process. For larger installations the BT8370 is also available as a 3x3 package or alternatively for screens 32" - 75" visit www.btechavmounts.com/systemx-configurator to specify a custom configuration that suits your needs.

SPECIFICATIONS

Recommended screen size	**32" - 75"**
Max load	**110lbs** per screen
VESA® & non-VESA fixings	up to **600 x 400***
Dimensions	**W: 79" D: 37.4" H: 74.7"**
Color options (base & interface arms)	**Black**
Color options (columns)	**Black** or **Silver**

FEATURES

1. Tool-less micro-adjustment for seamless display alignment
2. Cable management covers hides untidy cables and adds to the stylish finish
3. Fits System 2 compatible accessories such as shelves without using collars
4. Screen spacer designed to eliminate calculations and guess work when installing horizontal rails

- Use the online configurator to customise screen set-up
- Suitable for landscape or portrait mounting
- Includes adjustable levelling feet
- Includes non-marking 4" locking/braked castors
- Collar compatible accessories such as shelves cab be fitted directly to the extrusion
- Safety screws prevent unauthorized removal of screens
- All mounting hardware included
- TUV certified

ALTERNATE CONFIGURATIONS

There are actually over 2000 different configurations of BT8371 available! Visit our online configuration tool to specify setups of up to 6x4 with different options such as screen size, orientation and leg height.

Try now at **www.btechavmounts.com/systemx-configurator**

RECOMMENDED MAX SCREEN	MAX LOAD	MAX VESA	MICRO ADJUSTMENT	POST INSTALL ALIGNMENT	COLOR OPTIONS	CONFIGURE AS REQUIRED	TÜV CERTIFIED
75" 190cm	110lbs	600 x 400					TÜVRheinland

SYSTEM X

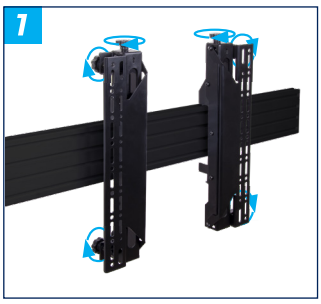

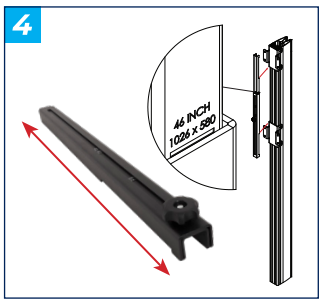

BT8370-2X2

TOP VIEW

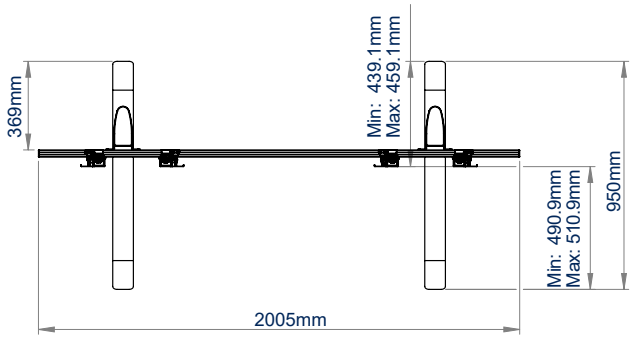

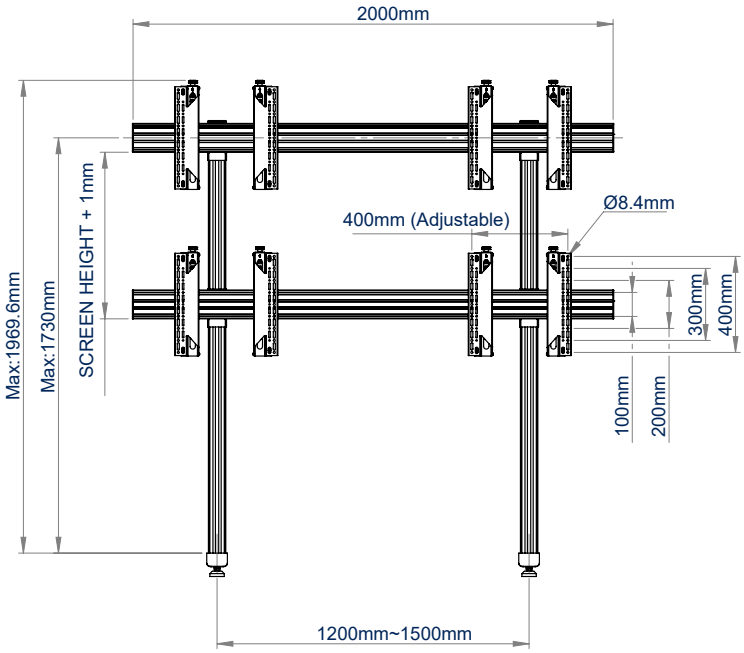

FRONT VIEW

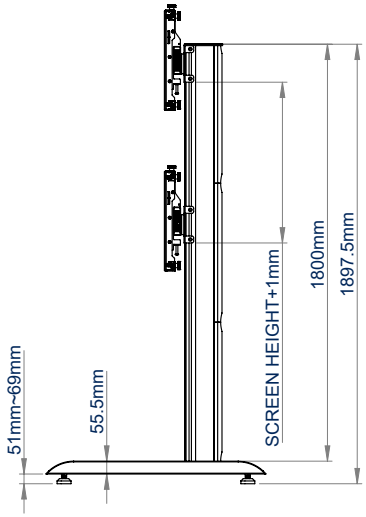

SIDE VIEW

ORDERING INFORMATION

COLOR	ORDER REF	BARCODE
Black w/ Black Columns	BT8370-2x2/BB	5019318501302
Black w/ Silver Columns	BT8370-2x2/BS	5019318501319

RELATED PRODUCTS

PRODUCT CODE	NAME	DESCRIPTION
BT8374	Universal Mobile Curved Videowall Stand	Designed for screens up to 75"
BT8372	Universal Bolt Down Videowall Stand	Designed for screens up to 75"
BT8371	Universal Mobile Videowall Stand	Designed for screens up to 75"
BT7863	Small AV Accessory Shelf	Can be attached directly to a vertical column

© 2025 B-Tech AV Mounts Corporation Ltd. All rights reserved.
The information in this specification sheet reflects the current technical specifications at the time of print.
We reserve the right to change the technical or physical specifications without prior notice. The B-Tech name and the B-Tech logo are registered trademarks of B-Tech AV Mounts Co. Ltd
All other brands and products are trademarks of their respective owners. All B-Tech images and symbols are exclusive property of B-Tech AV Mounts Co. Ltd
B-Tech accepts no liability for loss or damage caused by improper installation or mounting on unsafe structures. Any reproduction or retransmission or republication of any part of this specification sheet is strictly prohibited, unless prior written permission has been granted by B-Tech AV Mounts Co. Ltd EADE.

SS-V1-BT8370-2x2-060825