BT8374

UNIVERSAL MOBILE CURVED VIDEOWALL STAND

Designed to create curved videowalls, the BT8374 is a mobile mounting solution with a universal design suitable for all videowall screens from 39" to 75". As part of B-Tech's dynamic System X range, this contemporary mounting solution is lightweight yet incredibly strong, has a high-end aesthetic quality and comes with important time saving features such as integrated angle guides, tool-less micro-adjustment and a universal screen position spacer to speed up the installation process.

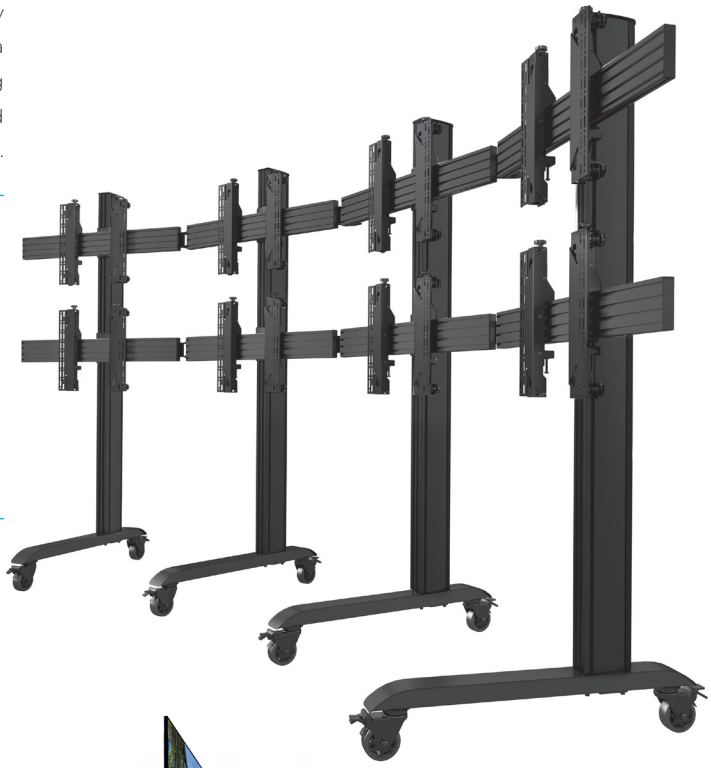

SPECIFICATIONS

Recommended screen size	**39" - 75"**
Max load	**50kg** per screen
Angle adjustment range	**+/- 45°**
VESA® & non-VESA fixings	up to **900mm***
Colour options (columns)	**Black** or **Silver**

FEATURES

1. Angle up to +/-45° to create a concave or convex curved videowall
2. Tool-less micro-adjustment for seamless screen alignment
3. Option for BT8390-VESA400MAP pop-out arms when ordering
4. Integrated cable management

- Configurable mounting solution available to order to your requirements, from stock - see configurator info
- Design suitable for all videowall screens
- Easy to use angle adjustment - set before or after installation
- Integrated angle guides eliminate the need to measure required angles
- Integrated rail mounting guides ensure the join position is consistent throughout the installation without the need to measure
- Includes non-marking 4" locking/braked castors and alternative levelling feet
- Safety screws help prevent unauthorised removal of screens
- Simple installation with all mounting hardware included
- TUV certified

RECOMENDED MAX SCREEN	MAX LOAD	MAX VESA	MICRO ADJUSTMENT	COLOUR OPTIONS	CONFIGURE AS REQUIRED	TÜV CERTIFIED
75" 190cm	50kg per screen	900				TÜVRheinland

SYSTEM X

1

2
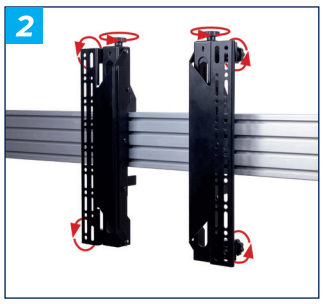

3
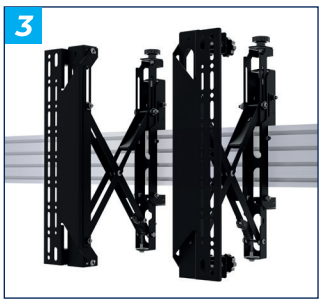

4

BT8374

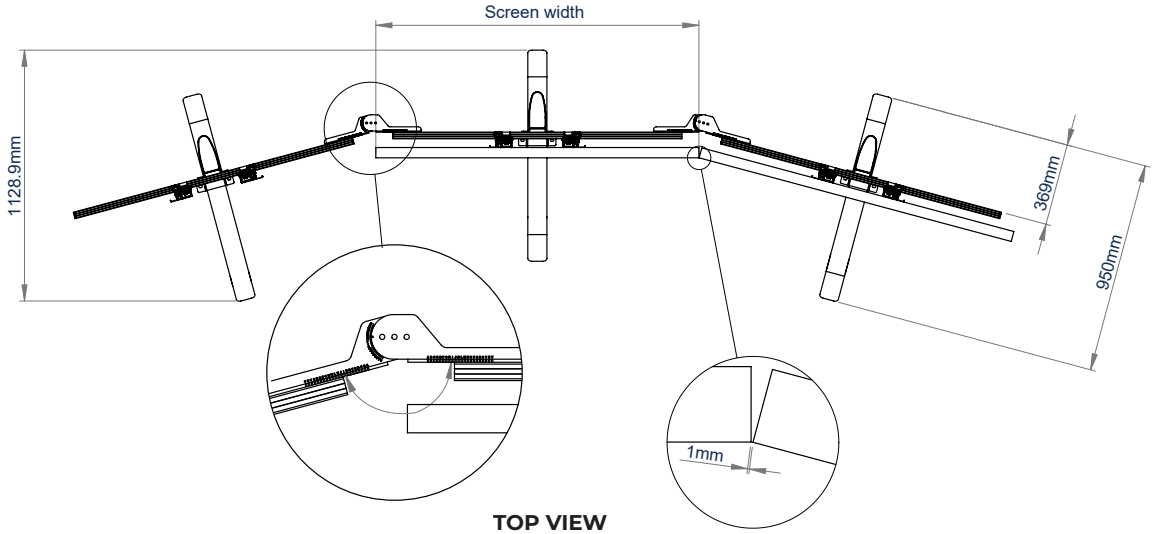

TOP VIEW

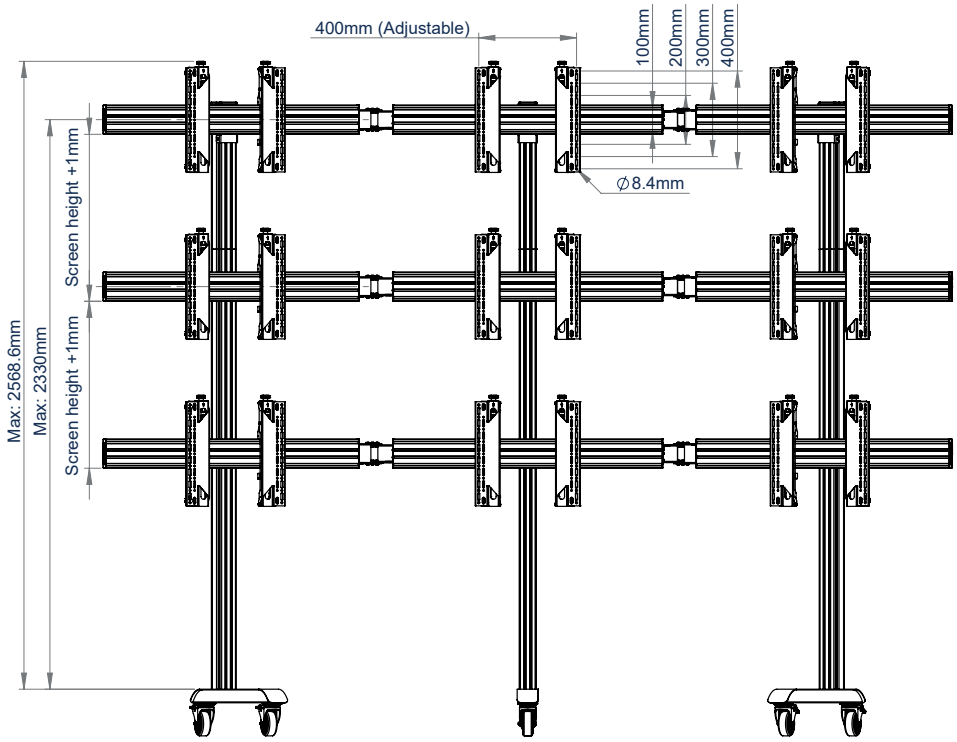

FRONT VIEW

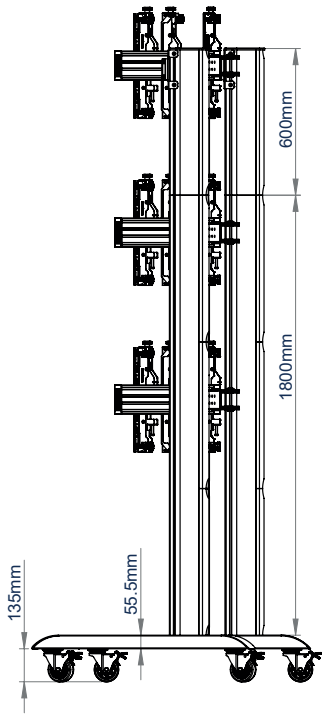

SIDE VIEW

ORDERING INFORMATION

COLOUR	ORDER REF	EAN
Black / Black	BT8374/BB	5019318301476
Black / Silver	BT8374/BS	5019318301469

RELATED PRODUCTS

PRODUCT CODE	NAME	DESCRIPTION
BT8373	Universal Freestanding Curved Videowall Stand	Designed to create curved videowalls
BT8375	Universal Bolt-Down Curved Videowall Stand	Designed to create curved videowalls
BT8376	Universal Freestanding Curved Videowall Mount	Designed to create curved videowalls
BT7032 / BT7033 / BT7863	AV Accessory Shelves	Attached directly to a vertical column

© 2023 B-Tech International Design & Manufacturing Limited. All rights reserved.
The information in this specification sheet reflects the current technical specifications at the time of print.
We reserve the right to change the technical or physical specifications without prior notice. The B-Tech name and the B-Tech logo are registered trademarks of B-Tech International Design & Manufacturing Limited.
All other brands and products are trademarks of their respective owners. All B-Tech images and symbols are exclusive property of B-Tech International Design & Manufacturing Limited.
B-Tech accepts no liability for loss or damage caused by improper installation or mounting on unsafe structures. Any reproduction or transmission or republication of any part of this specification sheet is strictly prohibited unless prior written permission has been granted by B-Tech International Design & Manufacturing Limited. E&OE.

SS-V2-BT8374-120924