BT8380-FFB

SYSTEM X™
BOLT-DOWN FLOOR BASE

Designed to securely fix System X installations to the floor, the BT8380-FFB Bolt-Down Floor Base attaches directly to any BT8380 vertical column to create a fixed position mounting solution with a minimal footprint. Using a 0.2" thick steel plate, this base is strong enough to support loads of up to 441lbs per column and is ideal for installations where floor space is limited, such as retail applications which require screens to be mounted closer to walls or shop windows.

SPECIFICATIONS

Max load	**441lbs** per column*
Plate thickness	**0.2"**
Base dimensions	W : **9.4"** D : **9.4"** H : **0.2"**
Color	**Black**

FEATURES

1. Used with System X BT8380 vertical columns
2. Can be used for single column installations in landscape or portrait format
3. Integrated cable management for a neat and tidy installation
4. Can be used for large scale straight or curved installations - ideal for control rooms

- Small footprint is ideal for retail applications where floor space is limited such as in shop windows or for close to the wall displays
- Heavy duty steel capable of supporting substantial loads
- High-end aesthetic quality
- Can be used for a single column installation of up to 4 screens tall**
- Comes included with any BT8372 Bolt-Down Videowall Stands
- TUV certified

SYSTEM X

MAX LOAD 441lbs | TÜV CERTIFIED TÜVRheinland

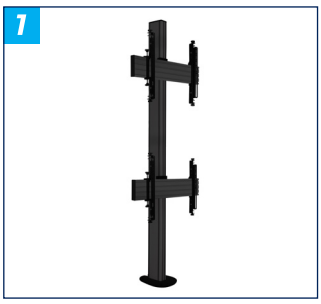

**No more than 220lbs should be mounted at a height above 1.2m*
***Dependant on screen size and weight*

BT8380-FFB

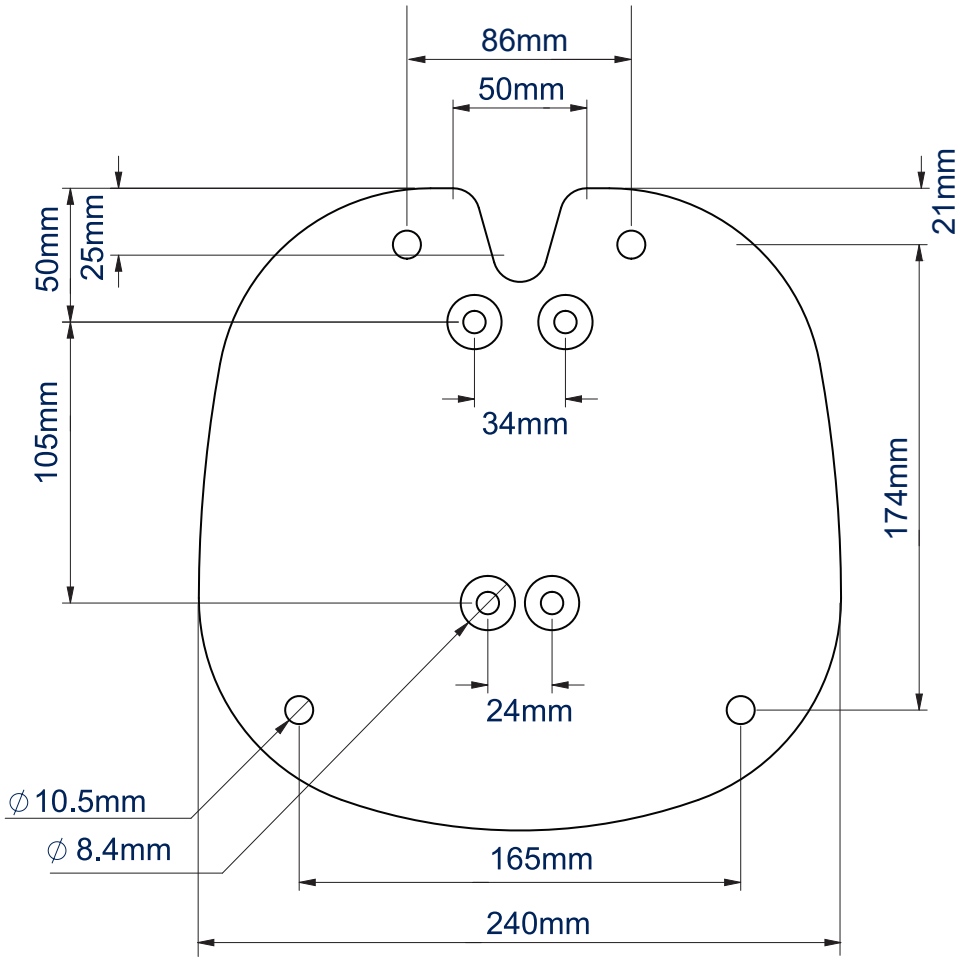

TOP VIEW

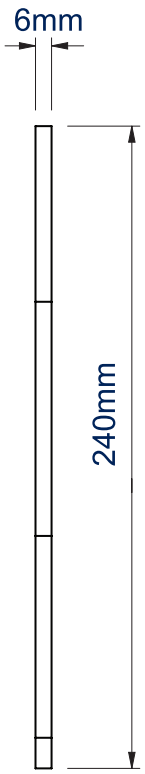

SIDE VIEW

ORDERING INFORMATION

COLOR	ORDER REF	BARCODE
Black	BT8380-FFB/B	5019318080197

RELATED PRODUCTS

PRODUCT CODE	NAME	DESCRIPTION
BT8390	Mounting Rails	Can be fixed to columns, walls or poles using System X components
BT8380	Vertical Support Column	Provides a platform for freestanding, mobile or bolt down solutions
BT8380-FFT	False Floor Trim Bases	For use with BT8380 Columns installed into false floors
BT8380-AFB	Bolt-Down Floor Base with Level Adjustment	For mounting Vertical Columns

© 2025 B-Tech AV Mounts Corporation Ltd. All rights reserved.
The information in this specification sheet affects the current technical specifications at the time of print.
We reserve the right to change specifications without prior notice. The B-Tech name and the B-Tech logo are registered trademarks of B-Tech AV Mounts Co. Ltd
All other brands and products are trademarks of their respective owners. All B-Tech images and symbols are exclusive property of B-Tech AV Mounts Co. Ltd
B-Tech accepts no liability for loss or damage caused by improper installation or mounting on unsuitable structures. Any reproduction or retransmission or republication of any part of this
website or its contents without prior permission is strictly prohibited. Printed by B-Tech AV Mounts Co. Ltd 2025.

SS-V2-BT8380-FFB-060825