BT8380-FFT

FALSE FLOOR TRIM
FOR USE WITH BT8380 COLUMNS

BT8380-FFT False Floor Trims are designed to improve the look of installations into false floors. Trims can be retro-fitted on to existing columns using the split design and are ideal for making cosmetic improvements to an installation by covering any cut-outs made to the false floor.

SPECIFICATIONS

Material	**Steel** (0.04")
Compatible column	**BT8380-060** & **BT8380-180**
Color	**Black**

FEATURES

- Designed to improve the look of a false floor mounted installation*
- Can be retro-fitted onto columns, using split design for easier installation
- Ideal for when a column passes through a raised floor
- Supplied with double sided adhesive tape to fix covers in position

TECHNICAL DRAWINGS

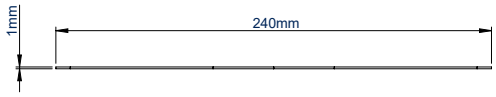

SIDE VIEW

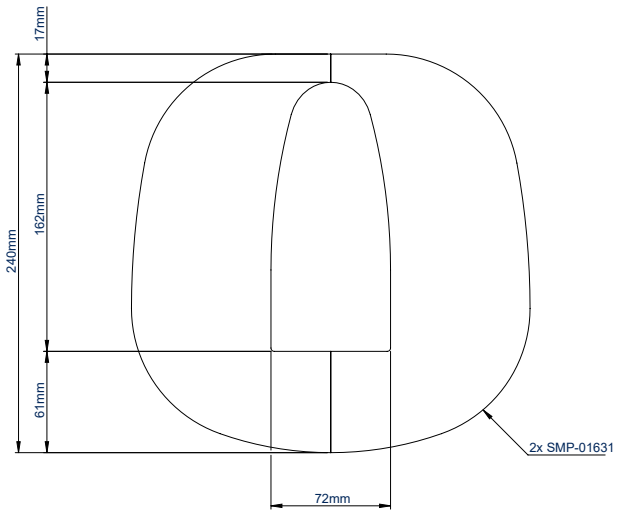

FRONT VIEW

ORDERING INFORMATION

COLOR	ORDER REF	BARCODE
Black	BT8380-FFT/B	5019318305252

RELATED PRODUCTS

PRODUCT CODE	NAME	DESCRIPTION
BT8380	Vertical Column	The backbone of most System X cart or floor stand installations
BT8380-FFB	Bolt Down Floor Base	Designed to securely fix System X installations to the floor
BT9372	Bolt Down Universal dvLED Videowall Stand	Bolt down solution designed to assemble dvLED panel videowalls
BT8372	Universal Bolt Down Videowall Stand	Designed for screens up to 75"

Column must also be fixed to the floor

© 2025 B-Tech AV Mounts Co. Ltd. All rights reserved.
The information in this specification sheet affects the current technical specifications at the time of print.
We reserve the right to change specifications without prior notice. The B-Tech name and the B-Tech logo are registered trademarks of B-Tech AV Mounts Co. Ltd
All other brands and products are trademarks of their respective owners. All B-Tech images and symbols are exclusive property of B-Tech AV Mounts Co. Ltd
B-Tech accepts no liability for loss or damage caused by improper installation or mounting on unsuitable structures. Any reproduction or retransmission or republication of any part of this
document without prior written permission is strictly prohibited. Generated by B-Tech AV Mounts Co. Ltd 2025.

SS-V4-BT8390-FFT-060825