# BT8709

## PREMIUM FREESTANDING SINGLE SCREEN TWIN COLUMN UC STAND
2M

The BT8709 is a 2m tall, premium flat screen display stand which can be customized with a variety of optional accessories such as VC shelves and media storage solutions. As part of B-Tech's Mode-AL brand of high-end display solutions, the BT8708 features a premium aesthetic which is perfectly suited to corporate office spaces and UC applications such as in boardrooms or conference facilities. A freestanding base allows XL screens to be repositioned as required and features integrated cable management to ensure a smart and stylish installation which is in keeping with the high-end, contemporary aesthetic.

### SPECIFICATIONS

| | |
|---|---|
| Recommended screen size | **65"** - **100"** |
| Max load | **220lbs** |
| VESA® and non-VESA fixings | up to **972** x **800mm** |
| Dimensions | W : **44.4"** D : **29.8"** H : **76.5"** |
| Color (column) | **Black** |

### FEATURES

1. Available in Black
2. Integrated cable management throughout the vertical column
3. Accessories such VC Shelves & media storage can be fitted easily (available separately)
4. Includes adjustable leveling fee suitable for uneven floors

- Suitable for landscape or portrait mounting
- Arms feature leveling screws to adjust the screen height
- Integrated cable management
- Safety screws help prevent unauthorized removal of screens
- Easily accessorized with a flip-down media storage tray and VC shelf (available separately), which can be positioned above or below the screen
- Casters for mobility also available separately **(BTW075-4)**
- Simple 'hook-on' screen installation

| RECOMMENDED MAX SCREEN | MAX LOAD | MAX VESA | POST INSTALL ALIGNMENT |
|---|---|---|---|
| 100" 254cm | 220lbs | 900 | |

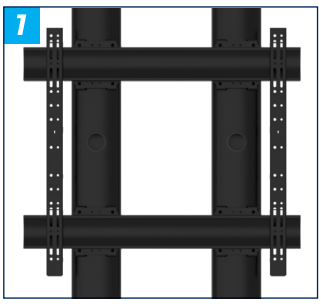

# BT8709

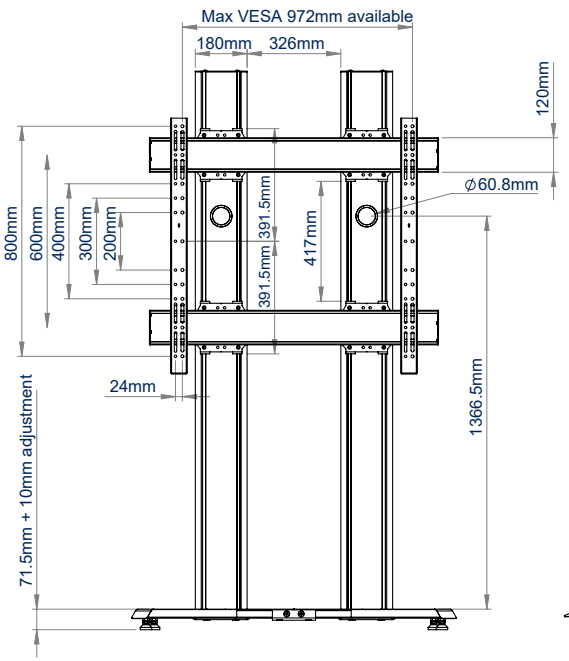


FRONT VIEW

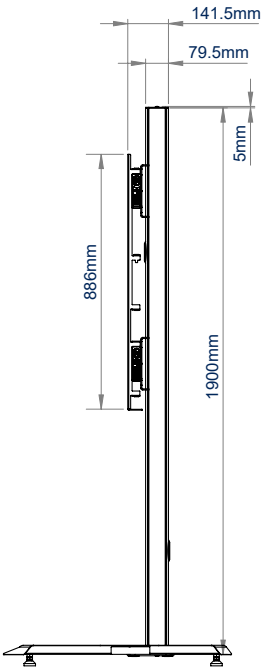


SIDE VIEW

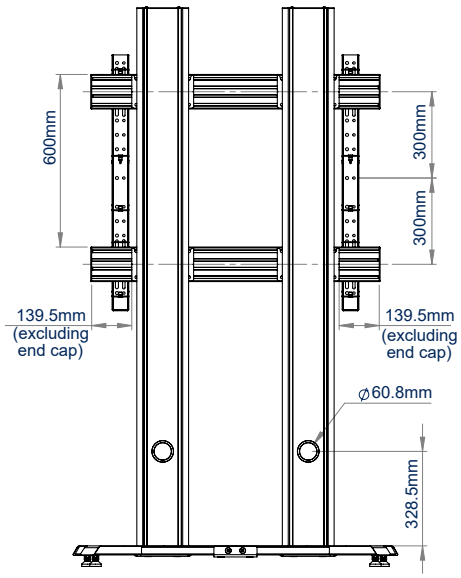


REAR VIEW

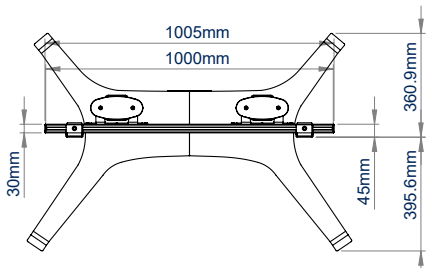


TOP VIEW

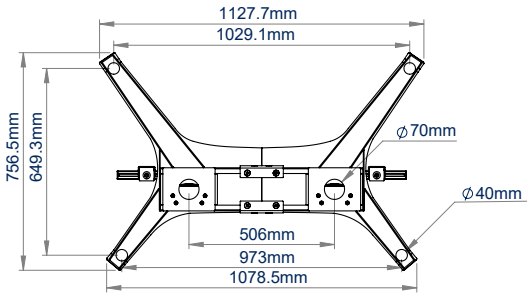


BOTTOM VIEW

## ORDERING INFORMATION

| COLOR | ORDER REF | EAN |
|---|---|---|
| Black | BT8708/B | 5019318303623 |

## RELATED PRODUCTS

| PRODUCT CODE | NAME | DESCRIPTION |
|---|---|---|
| BT8390-SA | Adjustable Accessory Mounting Arm | Designed for VC cameras when used with BT7863 |
| BT7863 | Small AV Accessory Shelf | Designed for use with BT8390-SA to mount VC cameras |
| BTW075-4 | 3" Braked Casters | For a mobile stand |
| BT8707 | Premium Floor-to-Wall Single Screen UC Stand - 2M | Designed for screens up to 100" |

© 2024 B-Tech AV Mounts Corporation Ltd. All rights reserved.
The information in this specification sheet affects the current technical specifications at the time of print.
We reserve the right to change specifications without prior notice. The B-Tech name and the B-Tech logo are registered trademarks of B-Tech AV Mounts Corporation Ltd
All other brands and products are trademarks of their respective owners. All B-Tech images and symbols are exclusive property of B-Tech AV Mounts Corporation Ltd
B-Tech accepts no liability for loss or damage caused by improper installation or mounting on unsuitable structures. Any reproduction or retransmission or republication of any part of this
document without the express written permission is strictly prohibited. Printed by B-Tech AV Mounts Corporation Ltd UK.

SS-V2-BT8709-070825