The information contained in this drawing is the sole property of B-Tech International Design and Manufacturing Limited, any reproduction in part or whole without the written permission of B-Tech International Design and Manufacturing Limited is prohibited.

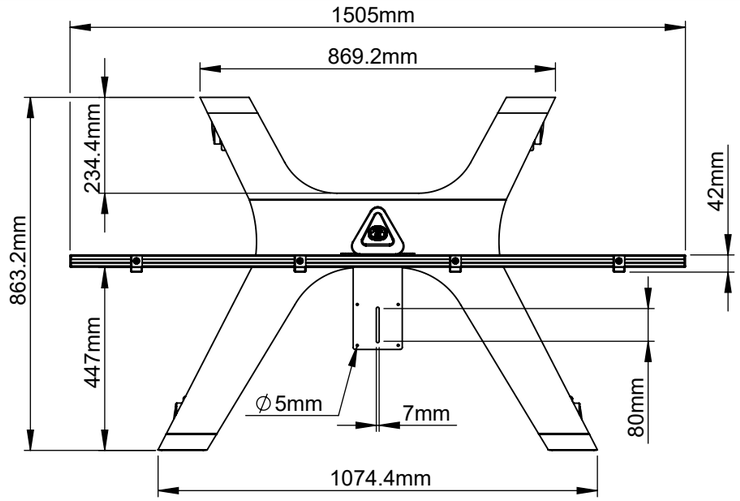


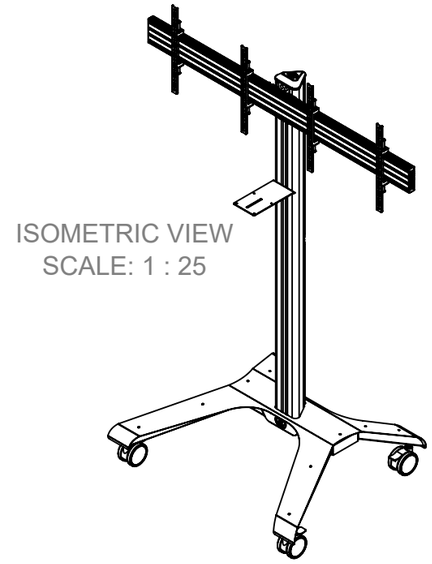


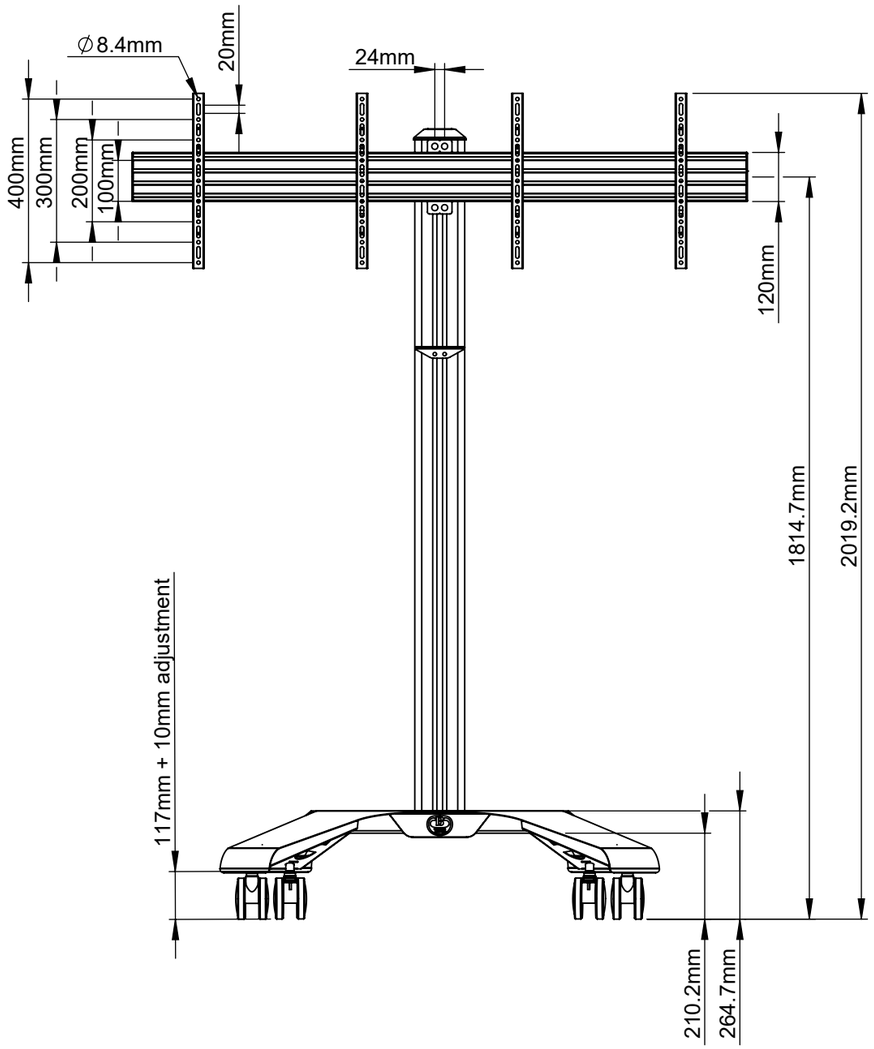


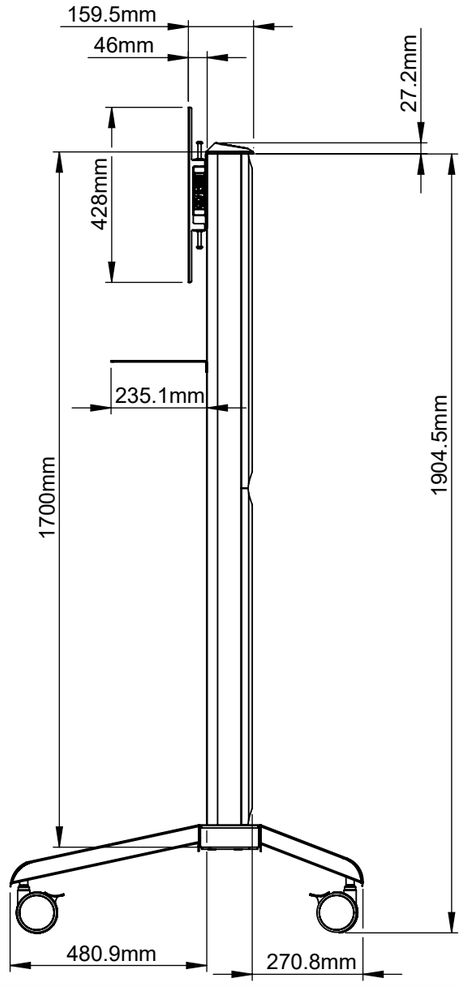


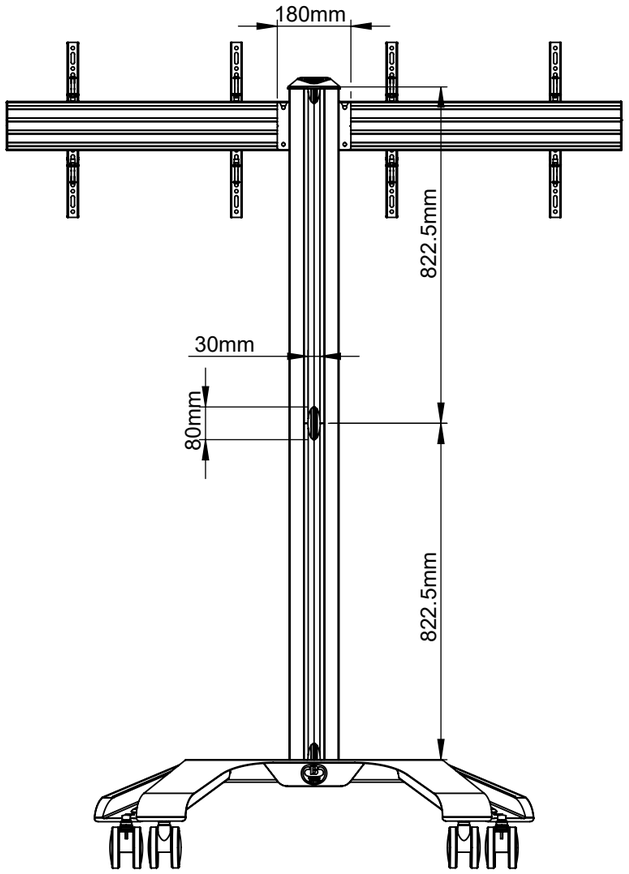


| | | | | | |
|---|---|---|---|---|---|
| **B-Tech International Design & Manufacturing Limited**<br>Part of the B-Tech International Group | | | | **B-Tech No:** | BT8514 |
| | | | | **Title:** | Universal Twin Screen VC Trolley |
| | UNLESS OTHERWISE SPECIFIED DIMENSIONS ARE IN MILLIMETERS | **Size:** | A3 | **Revision:** | R00 |
| | | **Scale:** | 1:15 | **Date:** | 25/03/2020 |
| | | **Sheet:** | 1 of 1 | **File Name:** | BTD-BT8514 |

B-Tech International Design and Manufacturing Limited makes no representation or warranties, express or implied, with respect to the reuse of the data provided herewith, regardless of its format or the means of its transmission. B-Tech International Design and Manufacturing Limited makes every effort to provide accurate information, however there is no guarantee or representation to the user as to the accuracy, currency, suitability or reliability of this data. The user assumes all risks associated with its use. B-Tech International Design and Manufacturing Limited assumes no responsibility for actual or consequential damage incurred as a result of any user's reliance on this data.