The information contained in this drawing is the sole property of B-Tech AV Mounts Corporation Limited, reproduction in part or whole without the written permission of B-Tech AV Mounts Corporation Limited is prohibited.

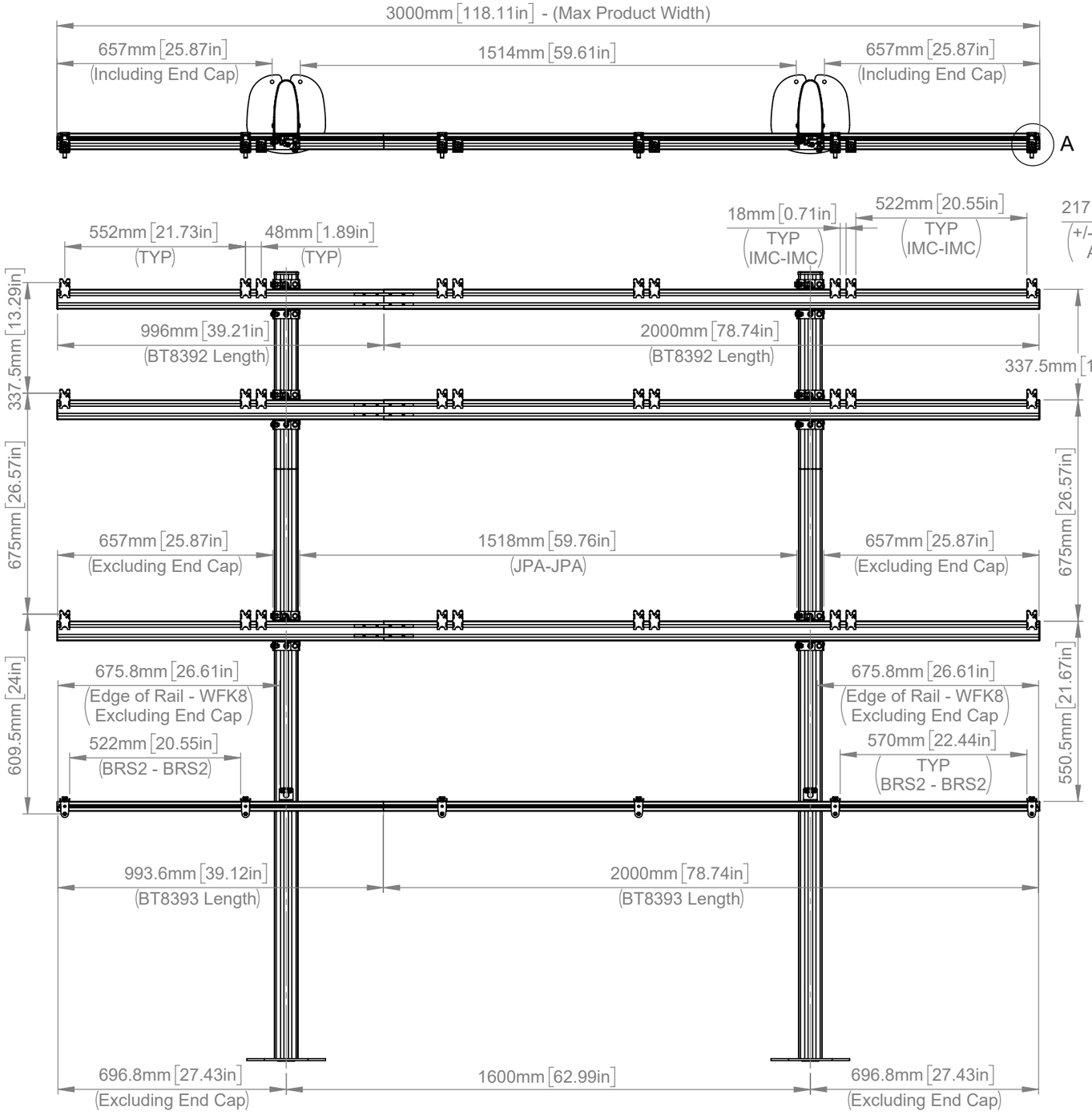

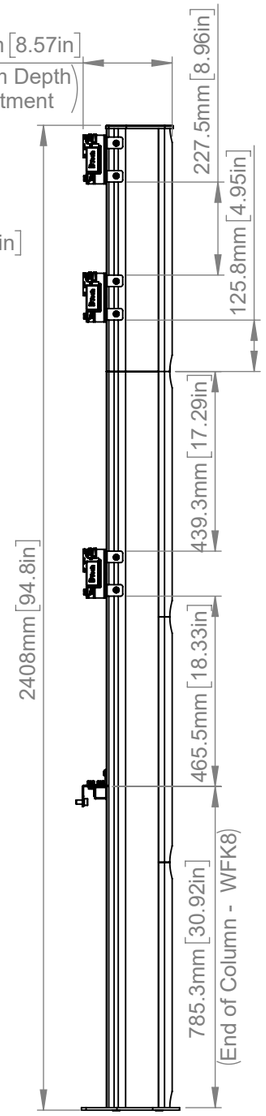

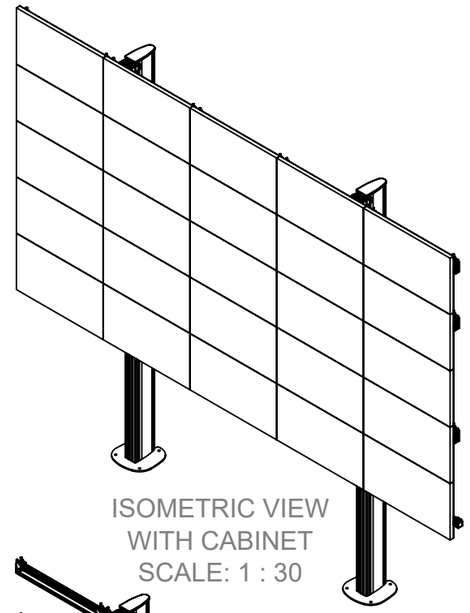

ISOMETRIC VIEW
WITH CABINET
SCALE: 1 : 30

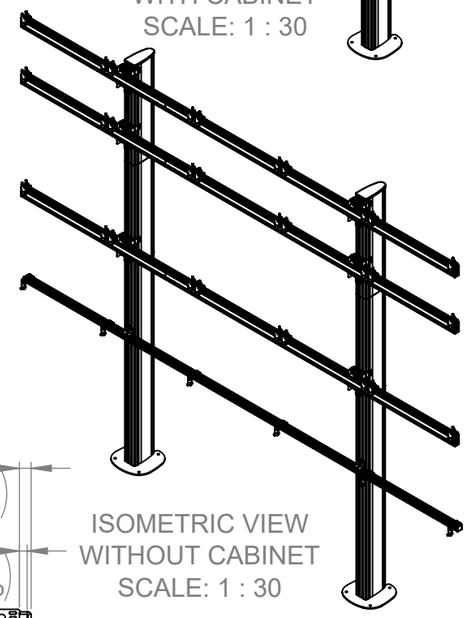

ISOMETRIC VIEW
WITHOUT CABINET
SCALE: 1 : 30

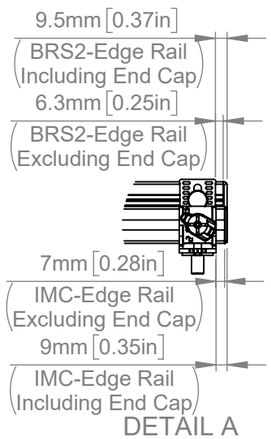

DETAIL A
SCALE 1 : 5

Drawing is based on 600x337.5mm cabinet - Bobbin location will vary between different cabinets

We recommend measuring from the top edge, to the top edge when installing the BT8392 horizontal rails.
Total B-TECH Mount Weight (Without the Cabinets) Approx: 54.54kg (120.24lbs).
Total dvLED Cabinet Weight (Excluding Cables) Approx: N/A (lbs)
Please view DXF file using eDrawings software for precise measurements.

B-Tech AV Mounts Corporation Limited makes no representation or warranties, express or implied, with respect to the reuse of the data provided herewith, regardless of its format or the means of its transmission. B-Tech AV Mounts Corporation Limited makes every effort to provide accurate information, however there is no guarantee or representation to the user as to the accuracy, currency, suitability or reliability of this data. The user assumes all risks associated with its use. B-Tech AV Mounts Corporation Limited assumes no responsibility for actual or consequential damage incurred as a result of any user's reliance on this data.

B-Tech AV Mounts Corporation Limited				**B-Tech No:**	BTXPS27-B5X5
				Title:	System Xpress: Universal 27” dvLED 5x5 Bolt-Down Stand-600
B Tech AV Mounts	UNLESS OTHERWISE SPECIFIED DIMENSIONS ARE IN MILLIMETERS	**Size:**	A3	**Revision:**	R00
		Scale:	1:15	**Date:**	09/01/2025
		Sheet:	1 of 1	**File Name:**	BTD-BTXPS27-B5X5-600